MAINSTREAM ENGINEERING CORP.

QWIKPAD® FOR GENERATORS

GENERATOR TIE-DOWN SYSTEM FOR HIGH-VELOCITY HURRICANE-ZONE (HVHZ)

Robert P Scaringe — Digitally signed by Robert P Scaringe Date: 2024.11.06 11:55:41 -05'00'

DR. ROBERT P. SCARINGE, P.E.
FL PE # 31527

ROBERT P. SCARINGE — LICENSE No. 31527 — STATE OF FLORIDA — PROFESSIONAL ENGINEER — 11/4/23

1/1 GENERATOR TIE-DOWN SYSTEM
1:14 SCALE — ISOMETRIC

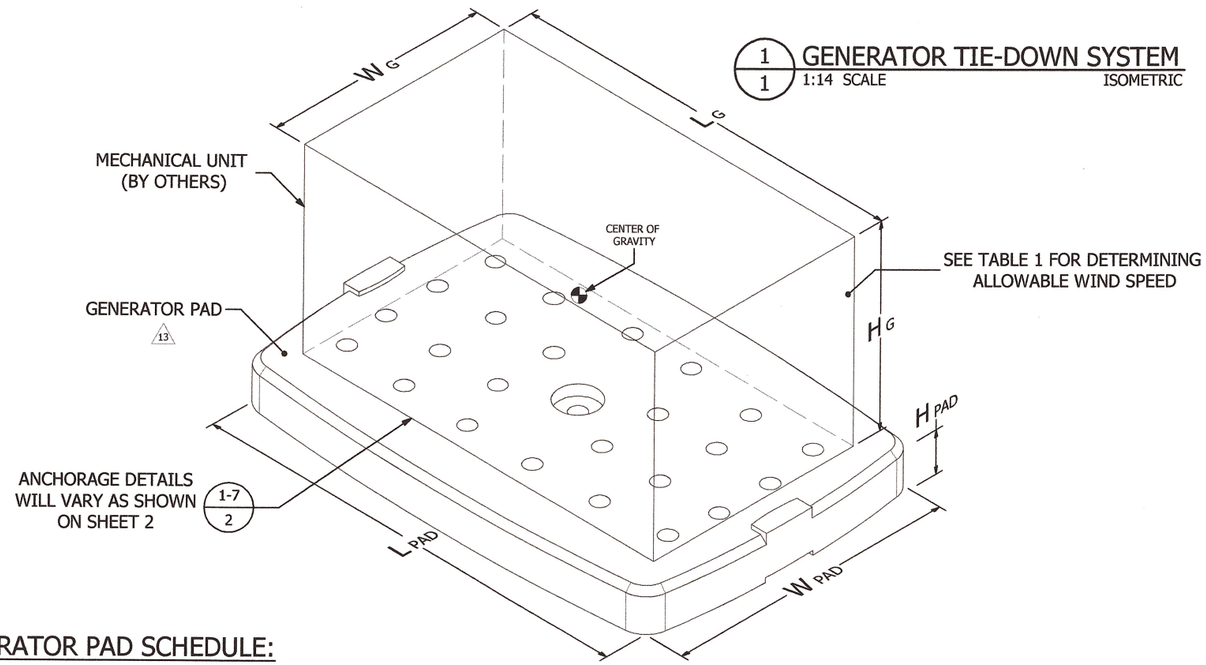

GENERATOR PAD SCHEDULE:

QWIKPAD® GENERATOR PAD						
PART NO.	INSTALLED PAD WEIGHT	L_{PAD}	W_{PAD}	H_{PAD}	RATED WIND SPEED	ULTIMATE PRESSURE
-	LB	IN	IN	IN	MPH	PSF
QT8200	330	56	38	5	180	66.2
QT8201	330	56	38	5	180	66.2
QT8210	330	56	38	5	180	66.2
QT8215	330	56	38	5	180	66.2
QT8220	330	56	38	5	180	66.2
QT8230	330	56	38	5	180	66.2
QT8230	330	56	38	5	180	66.2
QT8240	330	56	38	5	178†	64.8
					175†	63
					180	66.2

GENERATOR						
MAKE	NOMINAL RATING	SEE DESIGN NOTE 6 MODEL NO.	L_G	W_G	H_G	MIN. WEIGHT
-	-	-	IN	IN	IN	LB
(UNIVERSAL-LEGACY)	-	ALL LISTED MAKES/MODELS EXCEPT BRIGGS & STRATTON AND CUMMINS	SEE DESIGN NOTE 6			
(UNIVERSAL)	-	ALL LISTED MAKES/MODELS EXCEPT BRIGGS & STRATTON	SEE DESIGN NOTE 6			
CUMMINS	13 kW	C13N6H	34.1	36	27.3	479
	17 kW	C17N6H	34.1	36	27.3	540
	20 kW	C20N6H, C20N6HC	34.1	36	27.3	540
BRIGGS & STRATTON	17 kW	040459	47	31	31	484
	20 kW	040336, 040547				500
	17 kW	040661	46.5	26.8	28.4	520
	20 kW	040662, 040657	46.5	26.8	28.4	520
	26 kW	040658, 040664	46.5	26.8	28.4	540
	20 kW	040574, 040592, 040573	49.2	31.7	30.6	443
GENERAC	9 kW	G007029, G007030	48	25.1	28.6	340
	11 kW	G007031, G007032, G007033				348
	16 kW	G007035, G007036, G007037				409
	20 kW	G007038, G007039				448
	22 kW	G007042, G007043				466
	24 kW	G007209, G007210				455
	26 kW	G007290, G007291				518
HONEYWELL	16 kW	G007059	48	25.1	28.6	409
	20 kW	G007062				448
	22 kW	G007065				466
KOHLER	14 kW	14RCA	47	26	32.3	440
	14 kW	14RESA				420
	14 kW	14RCAL-200SELS				490
	14 kW	14RESAL				467
	20 kW	20RCA	48	26.2	29	555
	20 kW	20RCAL-200SELS				600
	20 kW	20RESA, 20RESC				535
	20 kW	20RESAL, 20 RESCL				580
	26 kW	26RCA	47	26	32.3	625
	26 kW	26RCAL				670

† 180 MPH WIND SPEED RATING ACHIEVED WITH USE OF QT8110 OR QT8111 ANCHOR KITS (FOR SOIL AND CONCRETE INSTALLATION SITES, RESPECTIVELY)

DESIGN NOTES:

1. THIS PRODUCT HAS BEEN DESIGNED IN ACCORDANCE WITH ASCE 7-22 AND THE FLORIDA BUILDING CODE - EIGHTH EDITION (2023) FOR USE WITHIN AND OUTSIDE THE HIGH-VELOCITY HURRICANE ZONE (HVHZ).
2. DESIGN CONSIDERS ASCE 7-22 SECTION 29.4 DESIGN WIND LOADS: OTHER STRUCTURES. ALL OTHER DESIGN VARIABLES AND LOADING FACTORS ARE IN ACCORDANCE WITH ASCE 7-22 CHAPTERS 26 & 29 FOR EXPOSURE CATEGORY C.
3. PRODUCTS DETAILED HEREIN ARE INCLUDED WITH THE QWIKPAD® FOR GENERATORS (QT8200 SERIES) HVHZ GENERATOR MOUNTING PADS, UNLESS OTHERWISE SPECIFIED. APPROPRIATE PAD MODEL ASSUMED TO BE DETERMINED BY CONTRACTOR/INSTALLER BASED ON GENERATOR MAKE/MODEL.
4. THIS INSTALLATION SPECIFICATION IS FOR INSTALLATION OF THE GIVEN GENERATOR MODELS ATOP ANY QWIKPAD® FOR GENERATORS (QT8200 SERIES), WITH THE PAD LEVELED AND LOCATED AT GRADE LEVEL ON COMPACTED GROUND OR ATOP EXISTING CONCRETE SLAB.
5. INSTALLATIONS ATOP EXISTING CONCRETE SLAB WHERE V_{ULT} WIND SPEEDS EXCEED DESIGN CHECK IN TABLE 2 REQUIRE (1) ANCHOR INSTALLED WITH S.S. FENDER WASHER THROUGH CENTER HOLE TO PREVENT SLIDING.
6. MODEL NUMBER LISTS IN GENERATOR PAD SCHEDULE AND WIND LOAD TABLES MAY NOT BE ALL INCLUSIVE. MODEL NUMBER VARIANTS MAY EXIST, OR MAY BE ADDED TO PRODUCT LINES, WHICH MEET WIND LOAD RATINGS. GENERATOR MODELS OTHER THAN THOSE LISTED HAVING EQUIVALENT, OR SMALLER, EXTERIOR DIMENSIONS (L_G, W_G, H_G), MATCHING ANCHORAGE PATTERNS, AND WEIGHT GREATER THAN OR EQUAL TO THOSE LISTED SHALL BE CONSIDERED TO MEET GIVEN V_{ULT} WIND SPEEDS. OTHERWISE, UNITS MUST BE CONSIDERED ON A CASE-BY-CASE BASIS.
7. GENERATOR MOUNT BOLTS TO BE INSTALLED INTO MAKE/MODEL SPECIFIC ANCHORAGE POINTS PER THE DEPICTED CONFIGURATION VIEWS. PROPER BOLT LENGTH ASSUMED TO BE DETERMINED BY CONTRACTOR/INSTALLER BASED ON GENERATOR MAKE/MODEL AND MINIMUM THREAD ENGAGEMENT SPECIFIED HEREIN.
8. DESIGN IS BASED ON INSPECTED PRODUCTS AND MANUFACTURING DRAWINGS PRODUCED BY MAINSTREAM ENGINEERING CORP. NO SUBSTITUTIONS WITHOUT WRITTEN APPROVAL BY THIS ENGINEER SHALL BE PERMITTED.

9. BOLTS SHALL BE 18-8 STAINLESS STEEL PER ASTM F593 IN ACCORDANCE WITH ANSI B18.2.1 WITH UNC CLASS 2A THREADS (PER ASME B1.1).
10. WASHERS SHALL BE 18-8 STAINLESS STEEL.
11. THREADED INSERTS SHALL BE BRASS PER ASTM B16 WITH UNC CLASS 2B THREADS (PER ASME B1.1) AND SHALL HAVE A PULL-OUT STRENGTH GREATER THAN 250 LB.
12. GENERATOR PAD SHALL BE LOW-DENSITY POLYETHYLENE (LDPE) WITH YIELD STRENGTH = 1.675 KSI OR BETTER PER ASTM D638 AND NOMINAL WALL THICKNESS = .220 (.1875 MIN.).
13. GENERATOR PAD SHALL BE FILLED WITH WATER AT INSTALLATION SITE TO ACHIEVE INSTALLED WEIGHTS GIVEN IN THE GENERATOR PAD SCHEDULE. WEIGHT OF FILLED PAD IS 330 LB.

GENERAL NOTES:

1. NO 33-1/3% INCREASE IN ALLOWABLE STRESS HAS BEEN USED IN THE DESIGN OF THIS SYSTEM.
2. CENTER OF GRAVITY ASSUMED TO ACT AT GEOMETRIC CENTER OF UNIT.
3. THE CONTRACTOR SHALL BE RESPONSIBLE TO INSULATE ALL MEMBERS FROM DISSIMILAR METALS TO PREVENT ELECTROLYSIS.
4. ELECTRICAL GROUND, WHEN REQUIRED, SHALL BE DESIGNED AND INSTALLED BY OTHERS.
5. THE SYSTEM DETAILED HEREIN IS GENERIC AND DOES NOT PROVIDE INFORMATION FOR A SPECIFIC SITE. FOR SITE CONDITIONS DIFFERENT FROM THE CONDITIONS DETAILED HEREIN, A LICENSED ENGINEER SHALL PREPARE SITE SPECIFIC DOCUMENTS IN CONJUNCTION WITH THIS DOCUMENT.
6. FOR AN EXPLANATION OF RISK AND EXPOSURE CATEGORIES THAT ACCOMPANY THE V_{ULT} WIND SPEEDS USED IN THIS APPROVAL, SEE SECTIONS 1.5.1 AND 26.7.3, RESPECTIVELY, OF ASCE 7-22. V_{ULT} WIND SPEEDS FOR RISK CATEGORY II DETERMINED BY FIGURE 26.5-1B OF ASCE 7-22.
7. GENERATOR WEIGHTS AND DIMENSIONS PER MANUFACTURER DOCUMENTATION, TO BE VERIFIED BY OTHERS.
8. ALL DIMENSIONS SHOWN ARE REFERENCE AND IN INCHES, UNLESS OTHERWISE SPECIFIED.

Solutions Through Advanced Technology
MAINSTREAM ENGINEERING
200 YELLOW PLACE
ROCKLEDGE, FL 32955
PH: (321) 631-3550
WWW.MAINSTREAM-ENGR.COM

QWIKPAD® FOR GENERATORS
GENERATOR TIE-DOWN SYSTEM FOR HVHZ

FBC 8TH EDITION (2023) PRODUCT APPROVAL

FL# 27646.1

REV	REMARKS	DRWN	CHKD	DATE
E	ADD QT8210, QT8220, & 24 kW GENERAC	B. WOODS	A. CARPENTER	07/21/2021
F	ADD 17 kW, 20 kW, 26 kW BRIGGS & STRATTON QT8215	R. SIMMONS	A. CARPENTER	12/15/2021
G	ADD 26 kW GENERAC MODEL	R. SIMMONS	A. CARPENTER	01/31/2022
H	REGISTERED MARK, ADD CUMMINS MODELS, ADD QT8201	R. SIMMONS	A. CARPENTER	05/17/2022
I	ADD KOHLER CONSCALE MODELS TO WIND LOAD TABLES	B. WOODS	A. CARPENTER	02/16/2023
J	UPDATE FOR FBC 8TH EDITION AND ASCE 7-22	T. ABBOTT	A. CARPENTER	08/17/2023

NOTICE: THIS DOCUMENT IS THE PROPERTY OF MAINSTREAM ENGINEERING CORPORATION AND SHALL NOT BE REPRODUCED IN WHOLE OR PART WITHOUT WRITTEN CONSENT OF MAINSTREAM ENGINEERING CORPORATION. ALTERATIONS, ADDITIONS, HIGHLIGHTING, OR OTHER MARKINGS TO THIS DOCUMENT ARE NOT PERMITTED AND INVALIDATE THIS CERTIFICATION.

QT8200 SERIES

DWG NO. 5010794 REV J

ANCHORAGE DETAILS FOR QT8200-SERIES GENERATOR PADS:

Robert P Scaringe — Digitally signed by Robert P Scaringe Date: 2024.11.06 11:56:17 -05'00'

DR. ROBERT P. SCARINGE, P.E.
FL PE # 31527

ROBERT P. SCARINGE — LICENSE No. 31527 — STATE OF FLORIDA — PROFESSIONAL ENGINEER — 8/4/23

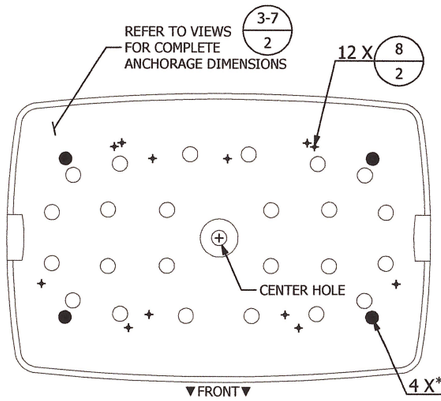

(UNIVERSAL CONFIGURATION-LEGACY)

1/2 QT8200 ANCHORAGE
1:20 SCALE TOP VIEW

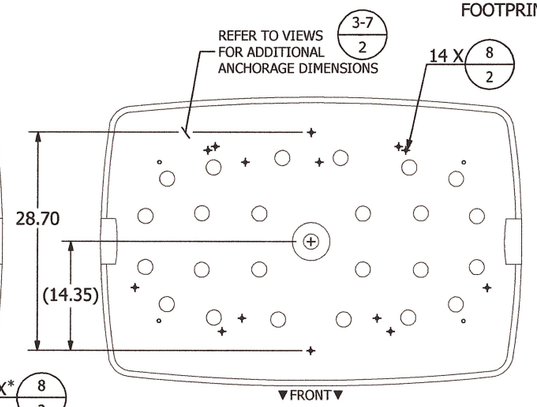

(UNIVERSAL CONFIGURATION)

2/2 QT8201 ANCHORAGE
1:20 SCALE TOP VIEW

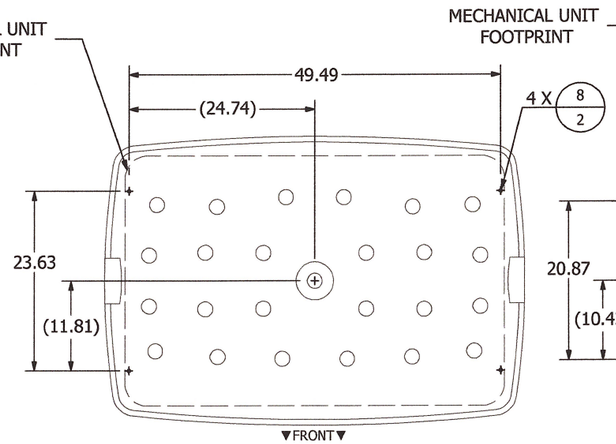

(BRIGGS & STRATTON - STEEL ENCLOSURE CONFIGURATION)

3/2 QT8210 ANCHORAGE
1:20 SCALE TOP VIEW

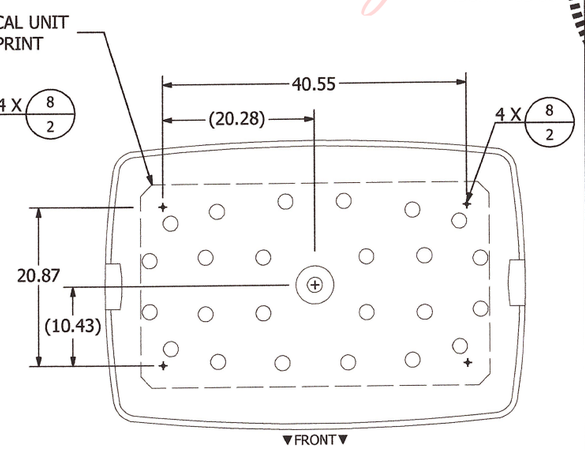

(BRIGGS & STRATTON - REFRESH CONFIGURATION)

4/2 QT8215 ANCHORAGE
1:20 SCALE TOP VIEW

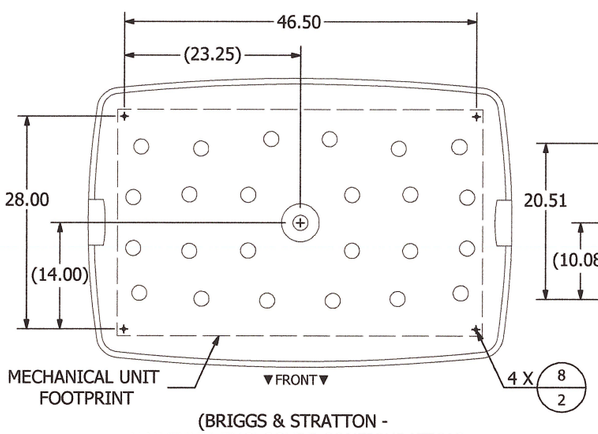

(BRIGGS & STRATTON - ALUMINUM ENCLOSURE CONFIGURATION)

5/2 QT8220 ANCHORAGE
1:20 SCALE TOP VIEW

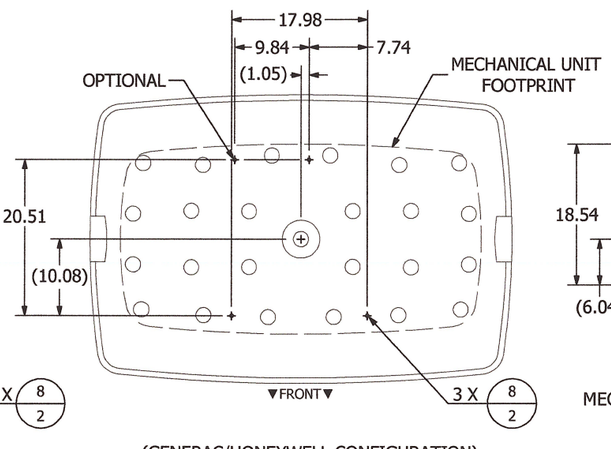

(GENERAC/HONEYWELL CONFIGURATION)

6/2 QT8230 ANCHORAGE
1:20 SCALE TOP VIEW

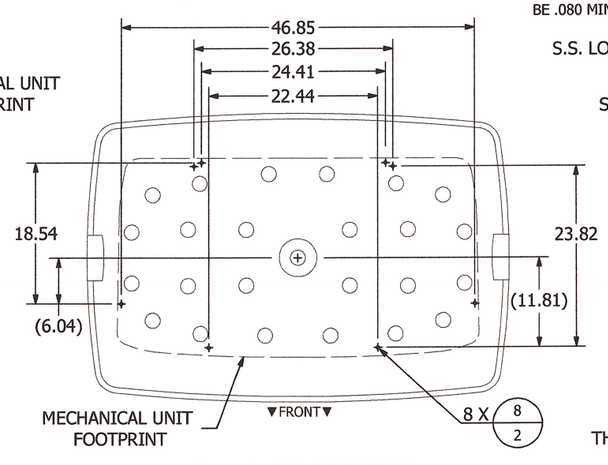

(KOHLER CONFIGURATION)

7/2 QT8240 ANCHORAGE
1:20 SCALE TOP VIEW

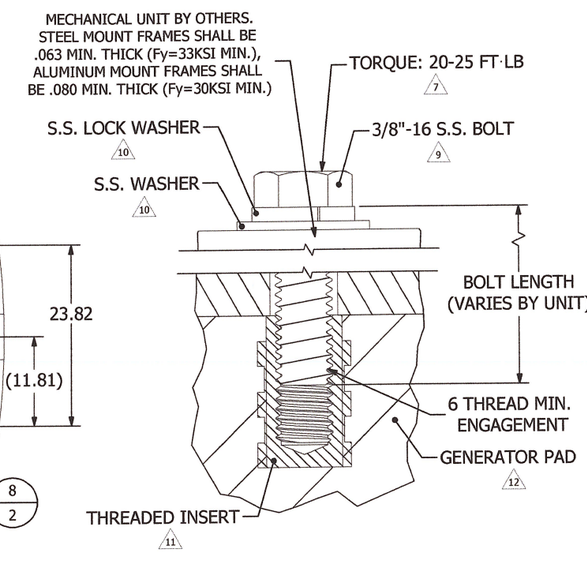

8/2 ANCHOR DETAIL
1:1 SCALE SECTION VIEW

* QT8200 UNIVERSAL CONFIGURATION LEGACY MAY INCLUDE 12 (STANDARD) OR 16 (ALTERNATE) ANCHORAGE LOCATIONS

Solutions Through Advanced Technology
MAINSTREAM ENGINEERING
200 YELLOW PLACE
ROCKLEDGE, FL 32955
PH: (321) 631-3550
WWW.MAINSTREAM-ENGR.COM

QWIKPAD® FOR GENERATORS
GENERATOR TIE-DOWN SYSTEM FOR HVHZ

FBC 8TH EDITION (2023) PRODUCT APPROVAL
FL# 27646.1

REV	REMARKS	DRWN	CHKD	DATE
E	ADD QT8210, QT8220, & 24 kW GENERAC	B. WOODS	A. CARPENTER	07/21/2021
F	ADD 17 kW, 20 kW, 26 kW BRIGGS & STRATTON QT8215	R. SIMMONS	A. CARPENTER	12/15/2021
G	ADD 26 kW GENERAC MODEL	R. SIMMONS	A. CARPENTER	01/31/2022
H	REGISTERED MARK, ADD CUMMINS MODELS, ADD QT8201	R. SIMMONS	A. CARPENTER	05/17/2022
I	ADD B&S, GENERAC, KOHLER MODELS, CONTROL LOCKING ES	B. WOODS	A. CARPENTER	02/16/2023
J	UPDATE FOR FBC 8TH EDITION AND ASCE 7-22	T. ABBOTT	A. CARPENTER	08/17/2023

NOTICE: THIS DOCUMENT IS THE PROPERTY OF MAINSTREAM ENGINEERING CORPORATION AND SHALL NOT BE REPRODUCED IN WHOLE OR PART WITHOUT WRITTEN CONSENT OF MAINSTREAM ENGINEERING CORPORATION. ALTERATIONS, ADDITIONS, HIGHLIGHTING, OR OTHER MARKINGS TO THIS DOCUMENT ARE NOT PERMITTED AND INVALIDATE THIS CERTIFICATION.

QT8200 SERIES

DWG NO. 5010794 REV J

WIND LOAD CALCULATIONS FOR QT8200-SERIES GENERATOR PADS:

APPROPRIATE PAD MODEL DETERMINED USING PAD SCHEDULE ON SHEET 1

TABLE 1. WIND LOAD OVERTURN DESIGN CHECK FOR QT8200-SERIES GENERATOR PADS FOR USE WITH RISK CATEGORY II STRUCTURE (EXPOSURE 'C') IN THE HVHZ.

GENERATOR							.6XDEAD LOAD (UNIT + PAD)	DEAD LOAD MOMENT	$F_{WIND, PAD}$	$F_{WIND, UNIT}$	$F_{WIND, TOT}$	ULTIMATE PRESSURE	WIND SPEED	DESIGN CHECK (NO ANCHORS)	DESIGN CHECK (1 ANCHOR) ‡
			DIMENSIONS												
MAKE	NOMINAL RATING	MODEL NO.	L_G	W_G	H_G	WEIGHT									
-	-	-	IN	IN	IN	LB	LB	FT-LB	LB	LB	LB	PSF	MPH	-	-
CUMMINS	13 kW	C13N6H	34.1	36	27.3	479	485.4	768.6	67.2	235.7	302.9	117.7	240.0	OK FOR 180 MPH	OK FOR 180 MPH
	17 kW	C17N6H	34.1	36	27.3	540	522.0	826.5	67.2	235.7	302.9	126.6	248.9	OK FOR 180 MPH	OK FOR 180 MPH
	20 kW	C20N6H, C20N6HC	34.1	36	27.3	540	522.0	826.5	67.2	235.7	302.9	126.6	248.9	OK FOR 180 MPH	OK FOR 180 MPH
BRIGGS & STRATTON	17 kW	040459	47	31	31	484	488.4	773.3	67.2	349.5	416.6	73.4	189.5	OK FOR 180 MPH	OK FOR 180 MPH
	20 kW	040336, 040547	47	31	31	500	498.0	788.5	67.2	349.5	416.6	74.8	191.4	OK FOR 180 MPH	OK FOR 180 MPH
	17 kW	040661	46.5	26.8	27.8	520	510.0	807.5	67.2	310.1	377.2	93.4	213.7	OK FOR 180 MPH	OK FOR 180 MPH
	20 kW	040662, 040657	46.5	26.8	27.8	520	510.0	807.5	67.2	310.1	377.2	93.4	213.7	OK FOR 180 MPH	OK FOR 180 MPH
	26 kW	040658, 040664	46.5	26.8	27.8	540	522.0	826.5	67.2	310.1	377.2	95.6	216.2	OK FOR 180 MPH	OK FOR 180 MPH
	20 kW	040574, 040592, 040573	49.2	31.7	30.6	443	463.8	734.4	67.2	361.1	428.3	68.1	182.6	OK FOR 180 MPH	OK FOR 180 MPH
GENERAC	9 kW	G007029, G007030	48	25.1	28.6	340	402.0	636.5	67.2	329.3	396.4	68.0	182.4	OK FOR 180 MPH	OK FOR 180 MPH
	11 kW	G007031, G007032, G007033	48	25.1	28.6	348	406.8	644.1	67.2	329.3	396.4	68.8	183.4	OK FOR 180 MPH	OK FOR 180 MPH
	16 kW	G007035, G007036, G007037	48	25.1	28.6	409	443.4	702.1	67.2	329.3	396.4	75.0	191.5	OK FOR 180 MPH	OK FOR 180 MPH
	20 kW	G007038, G007039	48	25.1	28.6	448	466.8	739.1	67.2	329.3	396.4	78.9	196.5	OK FOR 180 MPH	OK FOR 180 MPH
	22 kW	G007042, G007043	48	25.1	28.6	466	477.6	756.2	67.2	329.3	396.4	80.8	198.8	OK FOR 180 MPH	OK FOR 180 MPH
	24 kW	G007209, G007210	48	25.1	28.6	455	471.0	745.8	67.2	329.3	396.4	79.6	197.4	OK FOR 180 MPH	OK FOR 180 MPH
	26 kW	G007290, G007291	48	25.1	28.6	518	508.8	805.6	67.2	329.3	396.4	86.0	205.2	OK FOR 180 MPH	OK FOR 180 MPH
HONEYWELL	16 kW	G007059	48	25.1	28.6	409	443.4	702.1	67.2	329.3	396.4	75.0	191.5	OK FOR 180 MPH	OK FOR 180 MPH
	20 kW	G007062	48	25.1	28.6	448	466.8	739.1	67.2	329.3	396.4	78.9	196.5	OK FOR 180 MPH	OK FOR 180 MPH
	22 kW	G007065	48	25.1	28.6	466	477.6	756.2	67.2	329.3	396.4	80.8	198.8	OK FOR 180 MPH	OK FOR 180 MPH
KOHLER	14 kW	14RCA	47	26	32.3	440	462.0	731.5	67.2	364.1	431.3	64.7	177.9	UP TO 177 MPH	OK FOR 180 MPH
	14 kW	14RCAL-200SELS	47	26	32.3	490	492.0	779.0	67.2	364.1	431.3	68.9	183.5	OK FOR 180 MPH	OK FOR 180 MPH
	14 kW	14RESA	47	26	32.3	420	450.0	712.5	67.2	364.1	431.3	63.0	175.5	UP TO 175 MPH	OK FOR 180 MPH
	14 kW	14RESAL	47	26	32.3	467	478.2	757.2	67.2	364.1	431.3	66.9	181.0	OK FOR 180 MPH	OK FOR 180 MPH
	20 kW	20RCA	48	26.2	29	555	531.0	840.8	67.2	333.9	401.1	87.7	207.1	OK FOR 180 MPH	OK FOR 180 MPH
	20 kW	20RCAL-200SELS	48	26.2	29	600	558.0	883.5	67.2	333.9	401.1	92.1	212.3	OK FOR 180 MPH	OK FOR 180 MPH
	20 kW	20RESA, 20RESC	48	26.2	29	535	519.0	821.8	67.2	333.9	401.1	85.7	204.8	OK FOR 180 MPH	OK FOR 180 MPH
	20 kW	20RESAL, 20 RESCL	48	26.2	29	580	546.0	864.5	67.2	333.9	401.1	90.1	210.0	OK FOR 180 MPH	OK FOR 180 MPH
	26 kW	Kohler 26 RCA	47	26	32.3	625	573.0	907.3	67.2	364.1	431.3	80.2	198.1	OK FOR 180 MPH	OK FOR 180 MPH
	26 kW	Kohler 26 RCAL	47	26	32.3	670	600.0	950.0	67.2	364.1	431.3	84.0	202.7	OK FOR 180 MPH	OK FOR 180 MPH

‡ ANCHOR MUST HAVE A MIN. PULL OUT RATING OF 24 LBS TO PREVENT OVERTURN FOR VULT WIND SPEEDS UP TO 180 MPH IF 'DESIGN CHECK (NO ANCHORS)' IS BELOW 180 MPH.

Robert P Scaringe

Digitally signed by Robert P Scaringe
Date: 2024.11.06 11:56:40 -05'00'

DR/ROBERT P. SCARINGE, P.E.
FLPE # 31527

ROBERT P. SCARINGE
LICENSE
No. 31527
STATE OF FLORIDA
PROFESSIONAL ENGINEER
11/6/23

MAINSTREAM ENGINEERING
Solutions Through Advanced Technology
200 YELLOW PLACE
ROCKLEDGE, FL 32955
PH: (321) 631-3550
WWW.MAINSTREAM-ENGR.COM

QWIKPAD® FOR GENERATORS
GENERATOR TIE-DOWN SYSTEM FOR HVHZ

FBC 8TH EDITION (2023) PRODUCT APPROVAL

FL# 27646.1

REV	REMARKS	DRWN	CHKD	DATE
E	ADD QT8210, QT8220, & 24 kW GENERAC.	B. WOODS	A. CARPENTER	07/21/2021
F	ADD 17 kW, 20 kW, 26 kW BRIGGS & STRATTON QT8215	R. SIMMONS	A. CARPENTER	12/15/2021
G	ADD 26 kW GENERAC MODEL	R. SIMMONS	A. CARPENTER	01/31/2022
H	REGISTERED MARK, ADD CUMMINS MODELS, ADD QT8201	R. SIMMONS	A. CARPENTER	05/17/2022
I	ADD B&S, GENERAC, KOHLER MODELS TO WIND LOAD TABLES	B. WOODS	A. CARPENTER	02/16/2023
J	UPDATE TO THE 8TH EDITION AND ASCE 7-22	T. ABBOTT	A. CARPENTER	08/17/2023

NOTICE: THIS DOCUMENT IS THE PROPERTY OF MAINSTREAM ENGINEERING CORPORATION AND SHALL NOT BE REPRODUCED IN WHOLE OR PART WITHOUT WRITTEN CONSENT OF MAINSTREAM ENGINEERING CORPORATION. ALTERATIONS, ADDITIONS, HIGHLIGHTING, OR OTHER MARKINGS TO THIS DOCUMENT ARE NOT PERMITTED AND INVALIDATE THIS CERTIFICATION.

QT8200 SERIES

DWG NO. 5010794 **REV** J

WIND LOAD CALCULATIONS FOR QT8200-SERIES GENERATOR PADS:

APPROPRIATE PAD MODEL DETERMINED USING PAD SCHEDULE ON SHEET 1

TABLE 2. WIND LOAD SLIDING DESIGN CHECK FOR QT8200-SERIES GENERATOR PADS INSTALLED **ATOP EXISTING CONCRETE SLAB** FOR USE WITH RISK CATEGORY II STRUCTURE (EXPOSURE 'C') IN THE HVHZ.

GENERATOR															
MAKE	NOMINAL RATING	MODEL NO.	DIMENSIONS L_G	DIMENSIONS W_G	DIMENSIONS H_G	WEIGHT	NORMAL FORCE	STATIC FRICTION (μ_s = 0.6)	$F_{WIND, PAD}$	$F_{WIND, UNIT}$	$F_{WIND, TOT}$	ULTIMATE PRESSURE	WIND SPEED	DESIGN CHECK (NO ANCHORS)	DESIGN CHECK (1 ANCHOR) †
-	-	-	IN	IN	IN	LB	LB	LB	LB	LB	LB	PSF	MPH	-	-
CUMMINS	13 kW	C13N6H	34.1	36	27.3	479	809.0	485.4	107.6	377.8	485.4	55.4	164.6	UP TO 164 MPH	OK FOR 180 MPH
	17 kW	C17N6H	34.1	36	27.3	540	870.0	522.0	115.7	406.3	522.0	59.5	170.7	UP TO 170 MPH	OK FOR 180 MPH
	20 kW	C20N6H, C20N6HC	34.1	36	27.3	540	870.0	522.0	115.7	406.3	522.0	59.5	170.7	UP TO 170 MPH	OK FOR 180 MPH
BRIGGS & STRATTON	17 kW	040459	47	31	31	484	814.0	488.4	78.7	409.7	488.4	40.5	140.8	UP TO 140 MPH	OK FOR 180 MPH
	20 kW	040336, 040547	47	31	31	500	830.0	498.0	80.3	417.7	498.0	41.3	142.1	UP TO 142 MPH	OK FOR 180 MPH
	17 kW	040661	46.5	26.8	27.8	520	850.0	510.0	90.8	419.2	510.0	46.7	151.2	UP TO 151 MPH	OK FOR 180 MPH
	20 kW	040662, 040657	46.5	26.8	27.8	520	850.0	510.0	90.8	419.2	510.0	46.7	151.2	UP TO 151 MPH	OK FOR 180 MPH
	26 kW	040658, 040664	46.5	26.8	27.8	540	870.0	522.0	92.9	429.1	522.0	47.8	152.9	UP TO 152 MPH	OK FOR 180 MPH
	20 kW	040574, 040592, 040573	49.2	31.7	30.6	443	773.0	463.8	72.7	391.1	463.8	37.4	135.3	UP TO 135 MPH	OK FOR 180 MPH
GENERAC	9 kW	G007029, G007030	48	25.1	28.6	340	670.0	402.0	68.1	333.9	402.0	35.0	130.9	UP TO 130 MPH	OK FOR 180 MPH
	11 kW	G007031, G007032, G007033	48	25.1	28.6	348	678.0	406.8	68.9	337.9	406.8	35.4	131.7	UP TO 131 MPH	OK FOR 180 MPH
	16 kW	G007035, G007036, G007037	48	25.1	28.6	409	739.0	443.4	75.1	368.3	443.4	38.6	137.5	UP TO 137 MPH	OK FOR 180 MPH
	20 kW	G007038, G007039	48	25.1	28.6	448	778.0	466.8	79.1	387.7	466.8	40.7	141.1	UP TO 141 MPH	OK FOR 180 MPH
	22 kW	G007042, G007043	48	25.1	28.6	466	796.0	477.6	80.9	396.7	477.6	41.6	142.7	UP TO 142 MPH	OK FOR 180 MPH
	24 kW	G007209, G007210	48	25.1	28.6	455	785.0	471.0	79.8	391.2	471.0	41.0	141.7	UP TO 141 MPH	OK FOR 180 MPH
	26 kW	G007290, G007291	48	25.1	28.6	518	848.0	508.8	86.2	422.6	508.8	44.3	147.3	UP TO 147 MPH	OK FOR 180 MPH
HONEYWELL	16 kW	G007059	48	25.1	28.6	409	739.0	443.4	75.1	368.3	443.4	38.6	137.5	UP TO 137 MPH	OK FOR 180 MPH
	20 kW	G007062	48	25.1	28.6	448	778.0	466.8	79.1	387.7	466.8	40.7	141.1	UP TO 141 MPH	OK FOR 180 MPH
	22 kW	G007065	48	25.1	28.6	466	796.0	477.6	80.9	396.7	477.6	41.6	142.7	UP TO 142 MPH	OK FOR 180 MPH
KOHLER	14 kW	14RCA	47	26	32.3	440	770.0	462.0	71.9	390.1	462.0	37.0	134.5	UP TO 134 MPH	OK FOR 180 MPH
	14 kW	14RCAL-200SELS	47	26	32.3	490	820.0	492.0	76.6	415.4	492.0	39.4	138.8	UP TO 138 MPH	OK FOR 180 MPH
	14 kW	14RESA	47	26	32.3	420	750.0	450.0	70.1	379.9	450.0	36.0	132.8	UP TO 132 MPH	OK FOR 180 MPH
	14 kW	14RESAL	47	26	32.3	467	797.0	478.2	74.5	403.7	478.2	38.3	136.9	UP TO 136 MPH	OK FOR 180 MPH
	20 kW	20RCA	48	26.2	29	555	885.0	531.0	88.9	442.1	531.0	45.7	149.6	UP TO 149 MPH	OK FOR 180 MPH
	20 kW	20RCAL-200SELS	48	26.2	29	600	930.0	558.0	93.4	464.6	558.0	48.1	153.3	UP TO 153 MPH	OK FOR 180 MPH
	20 kW	20RESA, 20RESC	48	26.2	29	535	865.0	519.0	86.9	432.1	519.0	44.7	147.9	UP TO 147 MPH	OK FOR 180 MPH
	20 kW	20RESAL, 20 RESCL	48	26.2	29	580	910.0	546.0	91.4	454.6	546.0	47.0	151.7	UP TO 151 MPH	OK FOR 180 MPH
	26 kW	Kohler 26 RCA	47	26	32.3	625	955.0	573.0	89.2	483.8	573.0	45.9	149.8	UP TO 149 MPH	OK FOR 180 MPH
	26 kW	Kohler 26 RCAL	47	26	32.3	670	1000.0	600.0	93.4	506.6	600.0	48.1	153.3	UP TO 153 MPH	OK FOR 180 MPH

† FOR VULT WIND SPEEDS ABOVE THE 'DESIGN CHECK (NO ANCHORS)' WIND SPEED, (1) Ø1/4" X 5" ITW TAPCON CONCRETE SCREW (1.25" MIN. EMBEDMENT IN 3000 PSI MIN. CONCRETE AT 3.0" MIN. EDGE DISTANCE) INSTALLED WITH S.S. FENDER WASHER (13 GA MIN.) REQUIRED TO PREVENT SLIDING ON CONCRETE UP TO VULT WIND SPEEDS OF 180 MPH.

Robert P Scaringe
Digitally signed by Robert P Scaringe
Date: 2024.11.06 11:54:06 -05'00'

ROBERT P. SCARINGE LICENSE No. 31527 STATE OF FLORIDA PROFESSIONAL ENGINEER
DR. ROBERT P. SCARINGE, P.E.
FL PE# 31527
8/21/23

MAINSTREAM ENGINEERING
Solutions Through Advanced Technology
200 YELLOW PLACE
ROCKLEDGE, FL 32955
PH: (321) 631-3550
WWW.MAINSTREAM-ENGR.COM

QWIKPAD® FOR GENERATORS
GENERATOR TIE-DOWN SYSTEM FOR HVHZ

FBC 8TH EDITION (2023) PRODUCT APPROVAL
FL# 27646.1

REV	REMARKS	DRWN	CHKD	DATE
E	ADD QT8210, QT8220, & 24 kW GENERAC	B. WOODS	A. CARPENTER	07/21/2021
F	ADD 17 kW, 20 kW, 26 kW BRIGGS & STRATTON QT8215	R. SIMMONS	A. CARPENTER	12/15/2021
G	ADD 26 kW GENERAC MODEL	R. SIMMONS	A. CARPENTER	01/31/2022
H	REGISTERED MARK, ADD CUMMINS MODELS, ADD QT8201	R. SIMMONS	A. CARPENTER	05/17/2022
I	ADD BRS, GENERAC, KOHLER MODELS TO WIND LOAD TABLES	B. WOODS	A. CARPENTER	02/16/2023
J	UPDATE TO FBC 8TH EDITION AND ASCE 7-22	T. ABBOTT	A. CARPENTER	08/17/2023

NOTICE: THIS DOCUMENT IS THE PROPERTY OF MAINSTREAM ENGINEERING CORPORATION AND SHALL NOT BE REPRODUCED IN WHOLE OR PART WITHOUT WRITTEN CONSENT OF MAINSTREAM ENGINEERING CORPORATION. ALTERATIONS, ADDITIONS, HIGHLIGHTING, OR OTHER MARKINGS TO THIS DOCUMENT ARE NOT PERMITTED AND INVALIDATE THIS CERTIFICATION.

QT8200 SERIES

DWG NO. 5010794 REV J